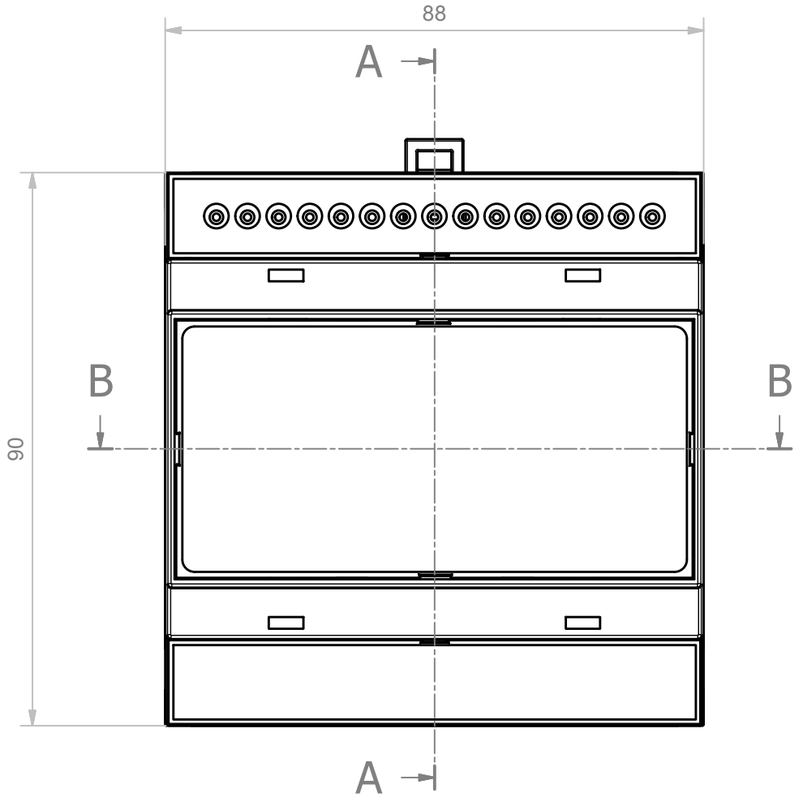

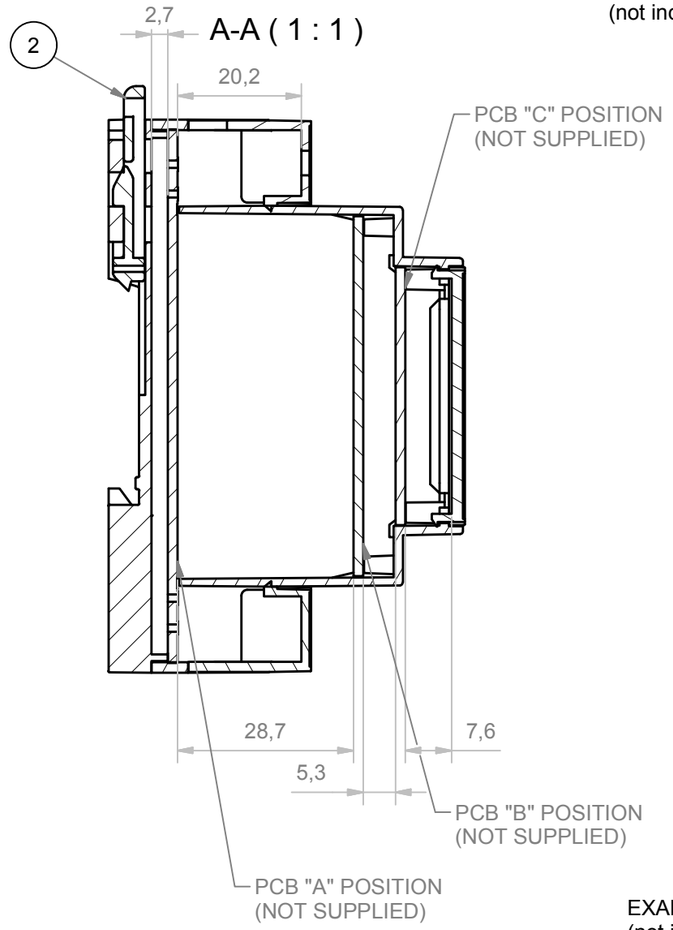

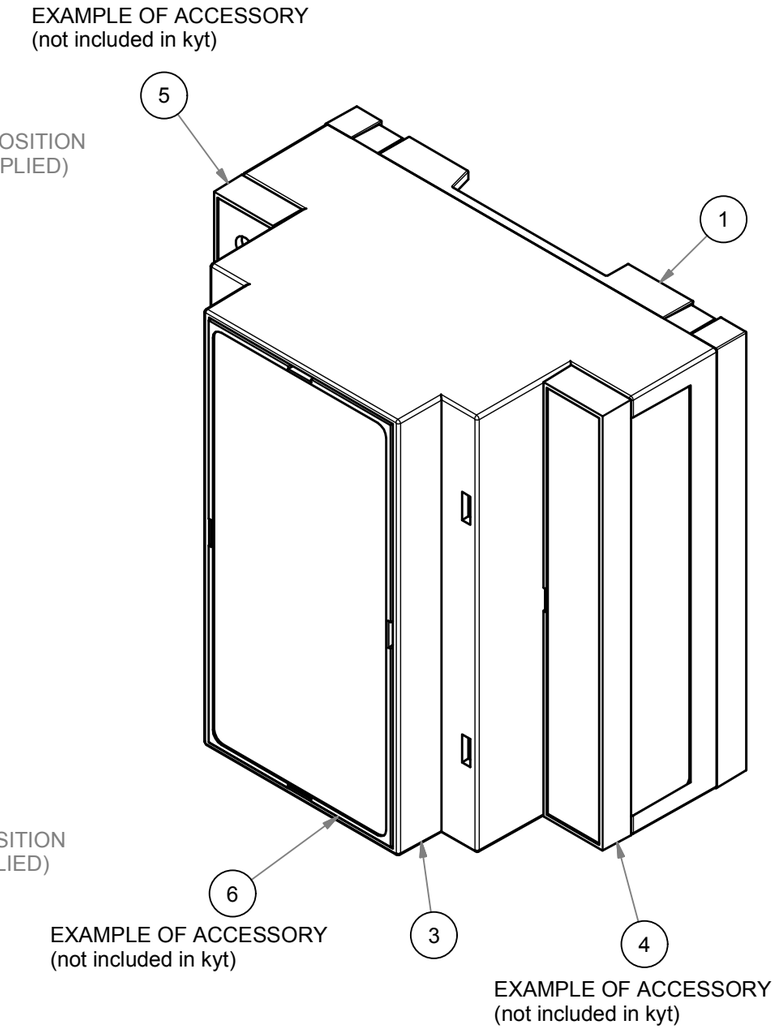

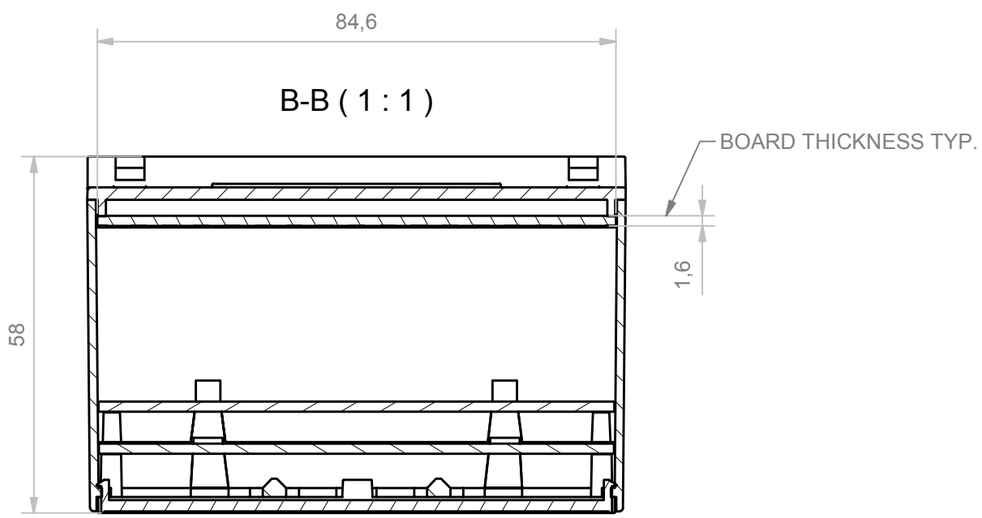

RIF.	Q.TY	DESCRIPTION	CODE
1	1	BASE MODULARE 5 MODULI	M-00489-00
2	1	MODULAR SHORT HOOK	M-01624-02
3	1	CORPO CONTENITORE 5M53	M-00206-01
4	1	COPRIMORSETTO SENZA FORATURA 5MPN	M-00698-00
5	1	COPRIMORSETTO PREFORATO PASSO 5,08 5MP05	M-00699-00
6	1	PANNELLO CON GANCI E SENZA CORNICE	M-01992-01

RESERVED PROPERTY:The present drawing cannot be reproduced or comunicated to 3d parties, even partially, without the authorization of ITALTRONIC Srl. Italtronic reserves to protect its own rights according to the law.

GENERAL TOLERANCE	UNI EN 22768/1 Media (m)	Drawed: Fanin F.	Checked: Dalla Montà D.	Revision description
SHEET NR. 1 / 1	Dimension in mm	DRAWING BY Manual modification are not allowed	Date: 08/06/2016	Scale: 1 : 1
			Replace nr.	Part number:

5 4 3 2 1

Denomination:
CONTENITORE COMPLETO MODULBOX 5M53
COMPLETE ENCLOSURE MODULDBOX 5M53

ITALTRONIC S.R.L.
VIA AUSTRIA 25/D 35127
PADOVA - ITALY
www.italtronic.com

Drawing nr.
M-06604-00